# TRM Project

## TRM-8AI-VOLT

EtherCAT®

## Hardware Architecture

## User Manual

*Tecnichal Documentation*

**T.P.A. Srl Tecnologie e Prodotti per l'Automazione -** Via Carducci, 221 - 20099 Sesto S. Giovanni
Tel. +390236527550 - www.tpaspa.it - P.I.: IT02016240968

## DOCUMENT DATA

| | |
|---|---|
| **Data** | 10/12/2025 |
| **Revision** | 0 |
| **FileName** | enTRM-8AI-VOLT.pdf |
| **Document type** | User manual |
| **Authors** | UT – TPA Srl |
| **Department** | DIP |
| **Notes** | Customer document |
| | This documentation is the property of TPA s.r.l.<br>Any unauthorized duplication is forbidden.<br>The Company reserves the right to modify the content of the document at any time." |
| | |

## REVISIONS

| Revision Number | Data | List of changes |
|---|---|---|
| **Rev.0** | 10/12/2025 | |
| **---** | | |
| **---** | | |

# *INDEX*

**DOCUMENT DATA** ..... **2**

**REVISIONS** ..... **2**

**CONTENTS** ..... **4**

**1 FUNCTIONAL SPECIFICATION** ..... **5**

**2 MECHANICAL DATA** ..... **8**

**3 ETHERCAT COMMUNICATION** ..... **9**

3.1 PDO's list ..... 11
3.2 Object Dictionary ..... 11

**4 TRM-8AI-VOLT VIEW** ..... **12**

# CONTENTS

This document is the User Manual for TRM-8AI-VOLT device. TRM-8AI-VOLT belongs to the TRM series of devices by TPA s.r.l. which are bus field devices to remote the CNC action on a tool machinery or, generally, in a controlled system; the devices are connected to a standard EtherCAT bus. TRM-8AI-VOLT is a module which provides 8 Analog Input in the range 0-24V. This document shows how to use TRM-8AI-VOLT, to connect it and all the technical specifications regarding the product.
This document is the property of TPA Srl
Not authorized duplication is forbidden.

This description is only intended for the use of trained specialists in control and automation engineering who are invited to always use the currently valid documentation.
It is recommended that the documentation (notes, explanations, diagrams, ecc.) are followed when installing and commissioning these components.
The responsible staff must ensure that the application or use of the products described satisfy all the requirements for safety, including all the relevant laws, regulations, guidelines and standards.

**Disclaimer**
The Company reserves the right to revise and modify the current documentation at any time.
The Company doesn't respond of not-correct or improper use of the device.

**Safeguard clause**
If any information about this device will result not clear, please do not esitate to take contacts with TPA.srl Service.

Albatros - Logo

TPA S.r.l - Logo

# 1 FUNCTIONAL SPECIFICATION

TRM-8AI-VOLT is a module which provides 8 Analogic Input 0…+24V, in differencial mode.
The resolution of the measure is 16bit = 0,366mV with a range = [0 … +65535].
It is directly joined to a bus coupler TRM-ECAT or in chain with other modules of the same serie.

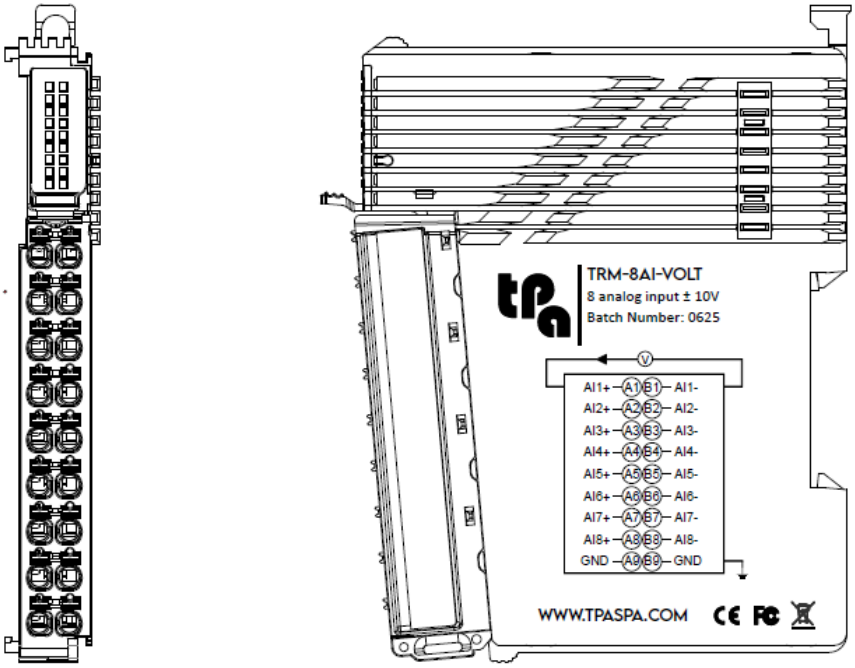


On the right side, a gray silscreen is printed and it reports:

- the device Name and its main function
- the batch production number
- the consortium EtherCAT logo to specify the environment of use and compatibility
- the TPA reference - TPA's logo, QR code and site address
- CE certification logo
- a simplified schematic for input connections

The connection between TRM-8AI-VOLT and other TRM's serie moduls is made by the internal standard E-BUS, as described in IEC61158. It must be used to connect the TRM's serie terminal modules to TRM-ECAT bus coupler. No other application is allowed.
The 8 differencial analogic input of TRM-8AI-VOLT can be connected by a 18-positions connector provided with the device. The connector used is.

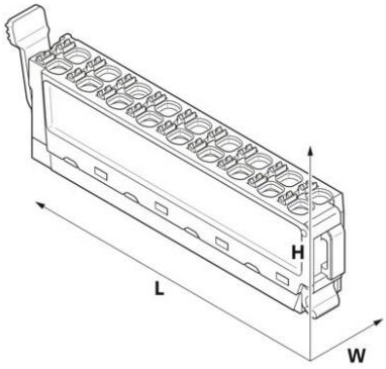


**HSCP-SP 1,5-18-IO-7035 color gray**
**producer code 1569965 - Phoenix**

Each input can be connected to two positions of the connector, which means:

- The positive signal must be tied to a “An” position
- The negative signal must be tied to the corresponding “Bn” position
- The 0V Analogic Ground is provided in position [A9], [B9] of the connector.

| | TOP LEFT PIN | TOP RIGHT IN | |
|---|---|---|---|
| **AI1+ Analogic Input + 01** | A1 | B1 | **AI1- Analogic Input – 01** |
| **AI2+ Analogic Input + 02** | A2 | B2 | **AI2- Analogic Input – 02** |
| **AI3+ Analogic Input + 03** | A3 | B3 | **AI3- Analogic Input – 03** |
| **AI4+ Analogic Input + 04** | A4 | B4 | **AI4- Analogic Input – 04** |
| **AI5+ Analogic Input + 05** | A5 | B5 | **AI5- Analogic Input – 05** |
| **AI6+ Analogic Input + 06** | A6 | B6 | **AI6- Analogic Input – 06** |
| **AI7+ Analogic Input + 07** | A7 | B7 | **AI7- Analogic Input – 07** |
| **AI8+ Analogic Input + 08** | A8 | B8 | **AI8- Analogic Input – 08** |
| **Power Supply +24V** | A9 | B9 | **Analogic Ground AG** |
| | **BOTTOM LEFT PIN** | **BOTTOM RIGHT PIN** | |

*Attention! Every input of TRM-8AI-VOLT is NOT protected against overvoltage. A voltage excess can damage the input. Each input circuit has 240 Ohm resistance to limit current. Then, a cut-off filter tuned to 20KHz limits the dynamic of the input and prevents is from inducted electrical noise.*

*Attention! Sampling time (time for Analog-to-Digital Conversion) is about* 350µs. *TRM-8AI-VOLT continues to execute the conversion in free running mode or it can be synchronized with DC clock.*

*Attention! The RTC rate of ECAT communication acts as a sort of cut-off filter. Infact, since RTC can be 250µs or 500µs or 1ms or more, this means that RTC is the main frequency limiter in acquisition of analog signals. For RTC=250µs, this time is lower than conversion time (350 µs). To avoid aliasing, the best condition is to get min. 4 samples (4x250µs) which means just 2 measures (2 x 350µs < 1000 µs). This means that the RTC rate acts as a Pass Bass filter tuned to 1KHz for that RTC frequency. The same concept can be extended to other values of RTC.*

*Attention! In case of a NOT differencial measure, which means it is referred to 0V, let’s tie the corresponding negative Analog Input to 0V (Analogic Ground pins). In this condition, the measure is referred to a range of 0 .. +24V, with a resolution of 65536 steps and ranging from -32768 to +32767. The analogic source to measure must be referred to the same voltage 0V too.*

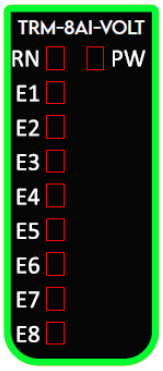


| LED | |
|---|---|
| **RN** | ECAT link status |
| **E1** | Analogic Input 1 – in error |
| **E2** | Analogic Input 2 – in error |
| **E3** | Analogic Input 3 – in error |
| **E4** | Analogic Input 4 – in error |
| **E5** | Analogic Input 5 – in error |
| **E6** | Analogic Input 6 – in error |
| **E7** | Analogic Input 7 – in error |
| **E8** | Analogic Input 8 – in error |
| **PW** | Logic power supply +5V |

On the top of the frontal image of TRM-8AI-VOLT a list of LED indicators is set.

| LED behaviour | ECAT State condition |
|---|---|
| **Exstinguished** | INIT State |
| **Blinking (regular)** | PreOP State |
| **Single flash** | SafeOP State |
| **Bright** | Operational |

Regarding the RN ECAT status led

*PW led ON means main logic power supply +5V by EBUS is present*

| Electrical parameters | Values |
|---|---|
| **Input signals** | 8, differencial voltage input |
| **Nominal voltage input range** | 0 … +24Vdc (-15% / +20%) |
| **Resolution** | 16 bit |
| **Resolution voltage step** | 0,366mV |
| **Measuring error** | <±0.1% (0°-55°C, relative to full range) |
| **Internal impedance (resistance)** | 240 Ohm |
| **Cut Off frequency (filter)** | < 20KHz |
| **Conversion time** | 350µs |
| **RTC rate** | 500µs, 1ms, 2ms, 4ms |
| **Frequency cut-off by RTC rate** | 1KHz (250µs), 500Hz (500µs), 250Hz (1ms), ecc. |
| **Electrical isolation** | 500V (from ECAT signals) |
| **Storage Temperature** | -40°C – 60°C |
| **Relative humidity** | 5 – 95% (not condensating) |
| **Dimensions** | 108x12,5x80mm. |
| **Net weight** | 60g. |
| **EMC** | CE/FCC |
| **Protection level** | IP20 |

## 2 MECHANICAL DATA

TRM-8AI-VOLT module can be installed onto a metallic rail DIN 60715, with “OMEGA“ profile, model 7,5mm. or 15mm.
To add a TRM-8AI-VOLT device to a TRM-ECAT or to another TRM module in a blackchain, let’s introduce it along the right side of the TRM-8AI-VOLT module. There are two plastic rails on the TRM-8AI-VOLT that help to get the correct position of the TRM I/O device. Then, throw up the orange tonge to fix it to the DIN rail.

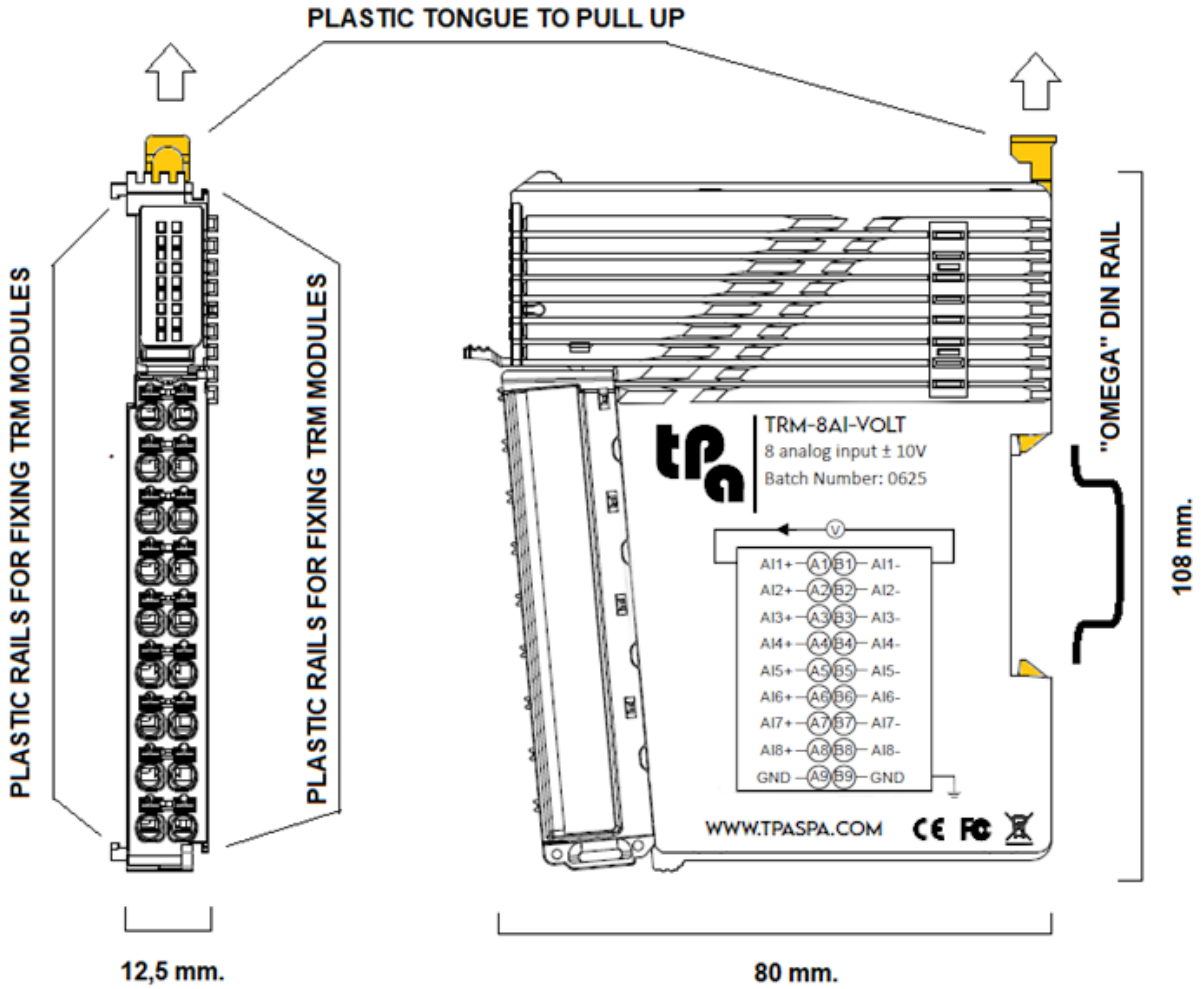


| Dimension | Value | Notes |
|---|---|---|
| **Height** | 108 mm. | Let’s consider the extension of the tongue and the possibility to have a min. extended space to handle it |
| **Dept** | 80 mm. | Let’s consider the extension of the connectors and the curves of the cables |
| **Thickness** | 12,5 mm. | |

# 3 ETHERCAT COMMUNICATION

The TRM-8AI-VOLT module is compliant with standard EtherCAT normed by ETG in IEC61158. TRM-8AI-VOLT is just a simple multi analog Input sampler and it is addressed as a station into the EtherCAT network; it can run only in an ECAT network.
Other TRM's serie devices can be mechanically and electrically joined to TRM-8AI-VOLT, to constitue a I/O remote block, connected in blockchain.

Data communication into the blockchain is supported by E-BUS, a local bus derived from ECAT. The communication is full-duplex, real time clocked and based on 100Base-Tx exchange on internal E-BUS. This bus is coupled toward ECAT by a TRM-ECAT modul. TRM-8AI-VOLT cannot be used not_joined to TRM-ECAT.
The max exchange rate (the real Time Clock of the network) can be accorded in this range: 250µs, 500µs, 1ms, 2ms, 4ms or more. It is a Master station dependent parameter.
Analog conversion is made in free-run mode, not synchronized with ECAT IRQ.
Methods to access and to run it are provided by a description ESI file (TRM-8AI-VOLT.xml is provided for setting up the device into the control system).
TRM-8AI-VOLT implements both PDO's communication for synchronous data and SDO's communication for setting and in general for asynchronous data.
TRM-8AI-VOLT supports COE protocol; it presents standard and specific objects in its Object Dictionary.

There are 4 Sync Manager (SM) set to provide COE asynchronous communications (MailBoxes) and buffer mode:
SM0 = Mail Box Out → start address 0x1000
SM1 = Mail Box In → start address 0x1200
SM2 = buffer mode RxPDO → start address 0x1400 (not enabled, since no data output)
SM3 = buffer mode TxPDO → start address 0x1800

Passing data and conversion A-to-D can be synchronized in DC mode or in free running (default).

In Albatros SW by TPA, you need to introduce a TRM-ECAT node to convert EtherCAT signals into EBUS format. In the hardware configurator window, under the EtherCAT bus symbol, it is possible to select the TRM-8AI-VOLT device.

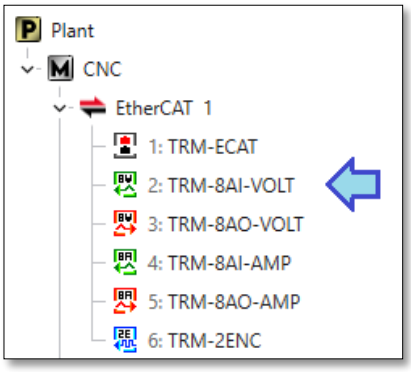


The hardware configuration window in Albatros.

7: TRM-8AI-VOLT

| | Index | In/Out | Sm | Tags | Size | Name |
|---|---|---|---|---|---|---|
| ☑ | 0x1A00 | In | 3 | F | 4.0 | AI Standard Channel 1 |
| ☐ | 0x1A01 | In | | F | 2.0 | AI Compact Channel 1 |
| ☑ | 0x1A02 | In | 3 | F | 4.0 | AI Standard Channel 2 |
| ☐ | 0x1A03 | In | | F | 2.0 | AI Compact Channel 2 |
| ☑ | 0x1A04 | In | 3 | F | 4.0 | AI Standard Channel 3 |
| ☐ | 0x1A05 | In | | F | 2.0 | AI Compact Channel 3 |
| ☑ | 0x1A06 | In | 3 | F | 4.0 | AI Standard Channel 4 |
| ☐ | 0x1A07 | In | | F | 2.0 | AI Compact Channel 4 |
| ☑ | 0x1A08 | In | 3 | F | 4.0 | AI Standard Channel 5 |
| ☐ | 0x1A09 | In | | F | 2.0 | AI Compact Channel 5 |
| ☑ | 0x1A0A | In | 3 | F | 4.0 | AI Standard Channel 6 |
| ☐ | 0x1A0B | In | | F | 2.0 | AI Compact Channel 6 |
| ☑ | 0x1A0C | In | 3 | F | 4.0 | AI Standard Channel 7 |
| ☐ | 0x1A0D | In | | F | 2.0 | AI Compact Channel 7 |
| ☑ | 0x1A0E | In | 3 | F | 6.0 | AI Standard Channel 8 |
| ☐ | 0x1A0F | In | | F | 4.0 | AI Compact Channel 8 |

Here is the Process Data window in Albatros SW, clicking on TRM-8AI-VOLT icon. TxPDOs to get data output of the 8 Analogic Channel of the device. RxPDOs are preconfigured to provide one INT16 (signed) in odd PDOs or one INT32 (signed) in even PDOs (conversion data + status word) for each channel. TxPDOs range from 0x1A00 to 0x1A0F.

The EtherCAT State Machine shown in figure is applyable to TRM-8AI-VOLT. Outputs are operative in PREOPERATIONAL, SAFE OPERATIONAL and OPERATIONAL state.

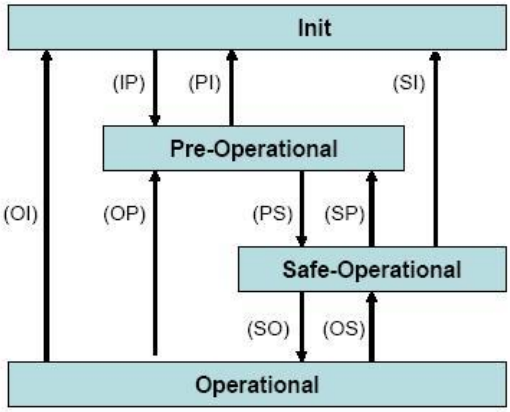

## 3.1 PDO's list

| Index(hex) | Name | Data | Size(Byte) |
|---|---|---|---|
| 0x1A0(2*n-2) | Analog Input Standard Channel n | A-to-D Conversion referred to INT16 bit + status | 4.0 |
| 0x1A0(2*n-1) | Analog Input Compact Channel n | A-to-D Conversion referred to INT16 bit | 2.0 |

For Channels= 1<n<8 – PDO Mapping

## 3.2 Object Dictionary

### 0x1000 Device Type

| Index(hex) | Name | Data | Data type | Marker | Default |
|---|---|---|---|---|---|
| 1000.0 | Device Type | EtherCAT type of the device | UINT32 | RO | 0x00001389 (5001 Dec) |

### 0x1008 Device Name

| Index(hex) | Name | Data | Data type | Marker | Default |
|---|---|---|---|---|---|
| 1008.0 | Device Name | EtherCAT name of the device | STRING | RO | TRM-8AI-VOLT |

### 0x1009 Hardware version

| Index(hex) | Name | Data | Data type | Marker | Default |
|---|---|---|---|---|---|
| 1009.0 | Device HW version | EtherCAT data about HW version | STRING | RO | 1.00 |

### 0x100A Software version

| Index(hex) | Name | Data | Data type | Marker | Default |
|---|---|---|---|---|---|
| 100A.0 | Device SW version | EtherCAT data about SW version | STRING | RO | 1.00 |

### 0x1018 Id of the node in ECAT net

| Index(hex) | Name | Data | Data type | Marker | Default |
|---|---|---|---|---|---|
| 1018.0 | Identity | To identify the device from station information | UINT8 | RO | 0x04 |
| 1018.01 | Vendo ID | EtherCAT from the station supplier ID | UINT32 | RO | 0x000002EA |
| 1018.02 | Product Code | EtherCAT from the station product ID | UINT32 | RO | 0xC0043238 |
| 1018.03 | Revision | EtherCAT from the station revision NrD | UINT32 | RO | 0x00000100 |
| 1018.04 | Serial Number | EtherCAT from the station Serial Nr | UINT32 | RO | 0x00000000 |

### 0x1A0(2*n-2) PDO's format

| Index(hex) | Name | Data | Data type | Marker | Default |
|---|---|---|---|---|---|
| 60n0.00 | AI Input Channel n | Maximum Subindex | UINT8 | RO | 0x11 (17 Dec) |
| 60n0.01 | Status_Underrange | Outstanding range | BOOLEAN | RO | 0x00 (0 Dec) |
| 60n0.02 | Status_Overrange | Overflow | BOOLEAN | RO | 0x00 (0 Dec) |
| 60n0.03 | Status_Limit 1 | Limit of 1 - detection:<br>00 = not enabled<br>01 = the value is less than the limit of 1<br>10 = the value is greater than the limit of 1<br>11 = the value is equal to the limit of 1 | BIT2 | RO | 00 (0 Dec) |
| 60n0.05 | Status_Limit 2 | Limit of 2 - detection:<br>00 = not enabled<br>01 = the value is less than the limit of 2<br>10 = the value is greater than the limit of 2<br>11 = the value is equal to the limit of 2 | BIT2 | RO | 00 (0 Dec) |
| 60n0.07 | Status_Error | Error 1 condition (broken line, overmeasure or underrange) | BOOLEAN | RO | 0x00 (0 Dec) |
| 60n0.0E | Status_Sync_Error | Synchronous error (DC mode only) | BOOLEAN | RO | 0x00 (0 Dec) |
| 60n0.0F | Status_TxPDO state | The effectiveness of the TxPDO data (0 valid, 1=invalid) | BOOLEAN | RO | 0x00 (0 Dec) |
| 60n0.10 | Status_TxPDO toggle | Switch TxPDO when data is updated | BOOLEAN | RO | 0x00 (0 Dec) |
| 60n0.11 | Value n | Channel voltage | INT16 | RO | 0x0000 (0 Dec) |

# 4 TRM-8AI-VOLT VIEW

TRM-8AI-VOLT
Front view

TRM-8AI-VOLT
Right side view

**T.P.A. Srl Tecnologie e Prodotti per l'Automazione**
Via Carducci, 221 - 20099 Sesto S. Giovanni
Tel. +390236527550 - www.tpaspa.it